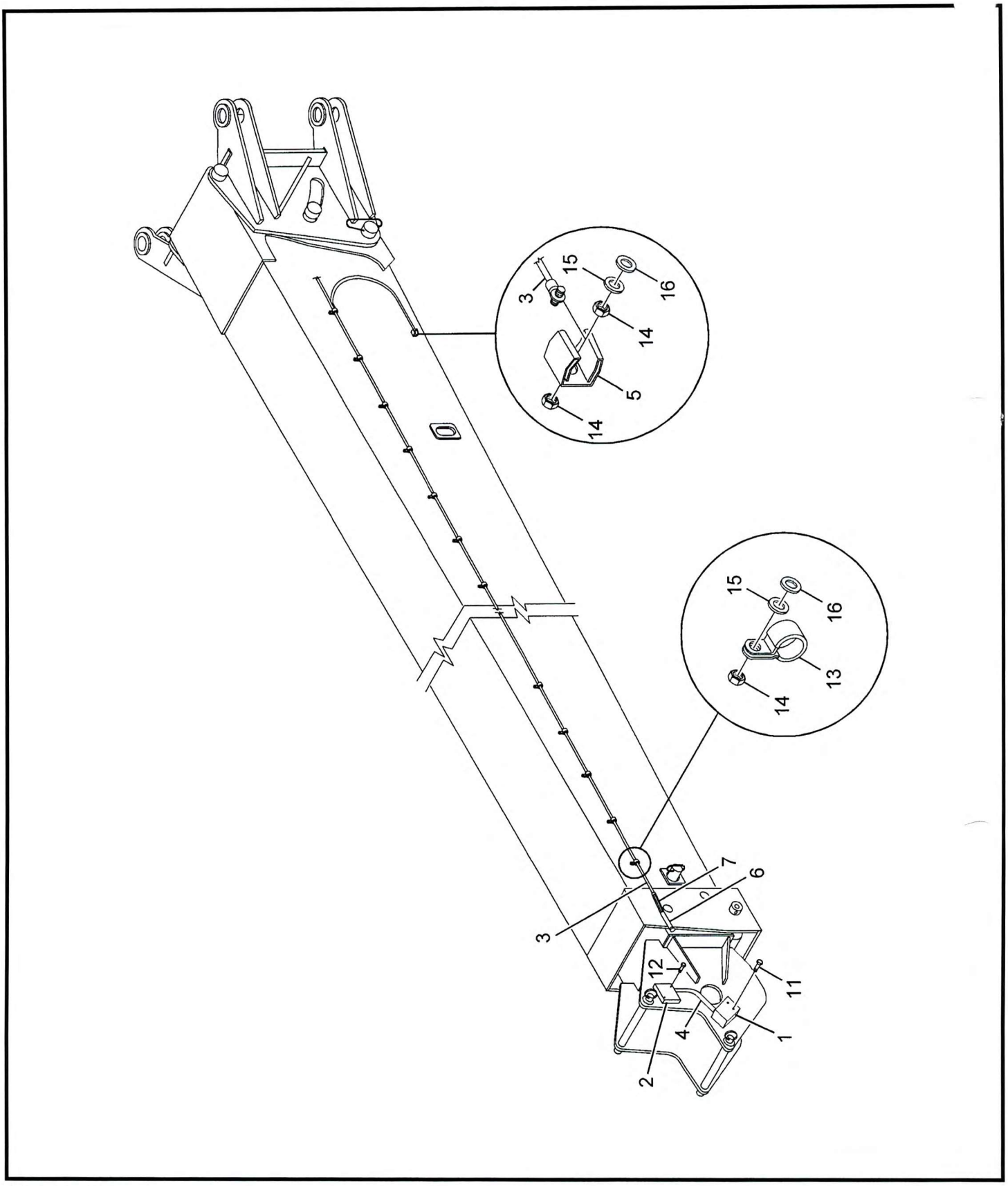

7598100003

(SHEET 1 OF 1)